Premium Version

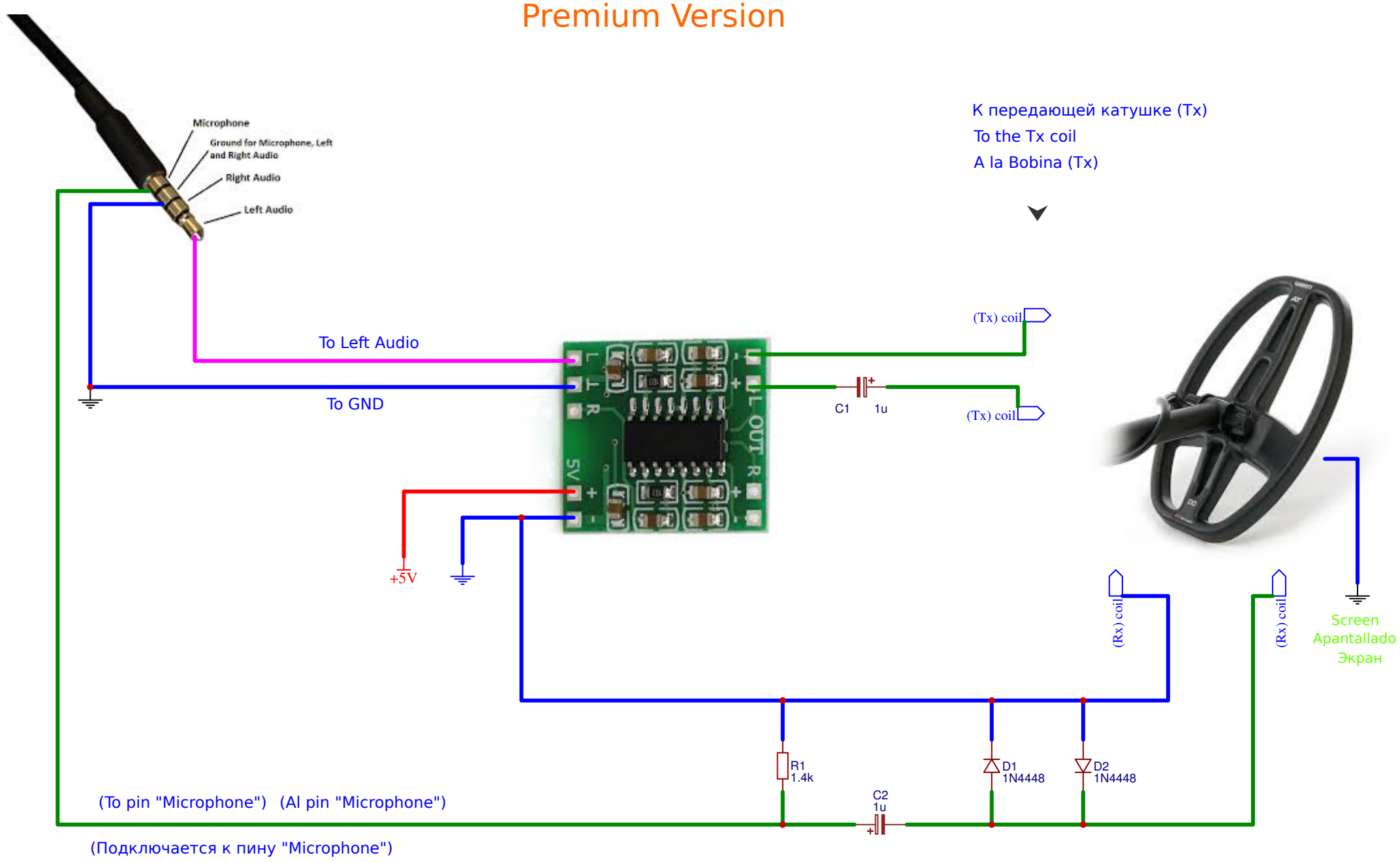

TITLE: Premium Version	REV: 1.0
Date: 2018-10-06	Sheet: 1/1
EasyEDA V5.7.26	Drawn By: necodesarrollo